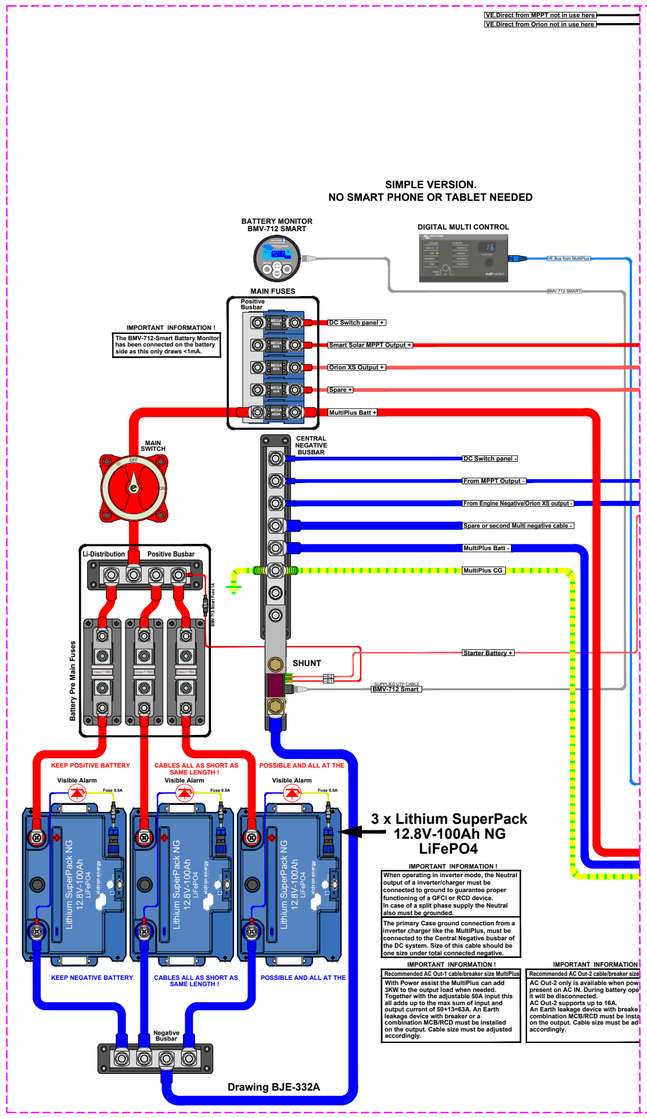
VE.Direct from MPPT not in use here
VE.Direct from Orion not in use here
SIMPLE VERSION.
NO SMART PHONE OR TABLET NEEDED
BATTERY MONITOR
BMV-712 SMART
DIGITAL MULTI CONTROL
VE.Bus from MultiPlus
BMV-712 SMART
MAIN FUSES
Positive Busbar
IMPORTANT INFORMATION !
The BMV-712-Smart Battery Monitor has been connected on the battery side as this only draws <1mA.
DC Switch panel +
Smart Solar MPPT Output +
Orion XS Output +
Spare +
MultiPlus Batt +
MAIN SWITCH
CENTRAL NEGATIVE BUSBAR
DC Switch panel -
From MPPT Output -
From Engine Negative/Orion XS output -
Spare or second Multi negative cable -
MultiPlus Batt -
MultiPlus CG
Li-Distribution
Positive Busbar
Battery Pre Main Fuses
SHUNT
Starter Battery +
SUPPLIED WITH CABLE
BMV-712 Smart
KEEP POSITIVE BATTERY
CABLES ALL AS SHORT AS SAME LENGTH !
POSSIBLE AND ALL AT THE
Visible Alarm
Fuse 0.5A
3 x Lithium SuperPack 12.8V-100Ah NG LiFePO4
Lithium SuperPack NG 12.8V-100Ah LiFePO4
KEEP NEGATIVE BATTERY
CABLES ALL AS SHORT AS SAME LENGTH !
POSSIBLE AND ALL AT THE
Negative Busbar
Drawing BJE-332A
IMPORTANT INFORMATION !
When operating in inverter mode, the Neutral output of a inverter/charger must be connected to ground to guarantee proper functioning of a GFCI or RCD device.
In case of a split phase supply the Neutral also must be grounded.
The primary Case ground connection from a inverter charger like the MultiPlus, must be connected to the Central Negative busbar of the DC system. Size of this cable should be one size under total connected negative.
IMPORTANT INFORMATION !
Recommended AC Out-1 cable/breaker size MultiPlus
With Power assist the MultiPlus can add 3KW to the output load when needed. Together with the adjustable 50A input this all adds up to the max sum of input and output current of 50+13=63A. An Earth leakage device with breaker or a combination MCB/RCD must be installed on the output. Cable size must be adjusted accordingly.
IMPORTANT INFORMATION
Recommended AC Out-2 cable/breaker size
AC Out-2 only is available when pow
present on AC IN. During battery ope
it will be disconnected.
AC Out-2 supports up to 16A.
An Earth leakage device with breake
combination MCB/RCD must be insta
on the output. Cable size must be adj
accordingly.

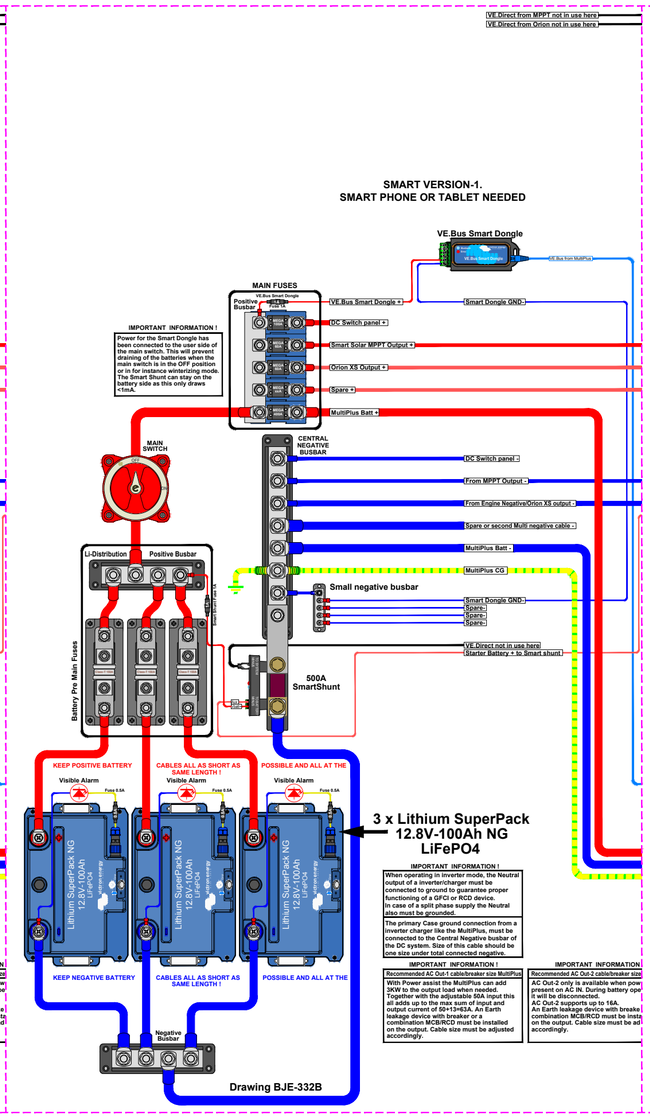
VE.Direct from MPPT not in use here
VE.Direct from Orion not in use here
SMART VERSION-1.
SMART PHONE OR TABLET NEEDED
VE.Bus Smart Dongle
VE.Bus from MultiPlus
MAIN FUSES
VE.Bus Smart Dongle +
Smart Dongle GND-
IMPORTANT INFORMATION !
Power for the Smart Dongle has been connected to the user side of the main switch. This will prevent draining of the batteries when the main switch is in the OFF position or in for instance winterizing mode. The Smart Shunt can stay on the battery side as this only draws <1mA.
DC Switch panel +
Smart Solar MPPT Output +
Orion XS Output +
Spare +
MultiPlus Batt +
MAIN SWITCH
CENTRAL NEGATIVE BUSBAR
DC Switch panel -
From MPPT Output -
From Engine Negative/Orion XS output -
Spare or second Multi negative cable -
MultiPlus Batt -
MultiPlus CG
Small negative busbar
Smart Dongle GND-
Spare-
Spare-
Spare-
VE.Direct not in use here
Starter Battery + to Smart shunt
500A SmartShunt
Li-Distribution
Positive Busbar
Battery Pre Main Fuses
KEEP POSITIVE BATTERY
CABLES ALL AS SHORT AS SAME LENGTH !
POSSIBLE AND ALL AT THE
Visible Alarm
Fuse 0.5A
3 x Lithium SuperPack 12.8V-100Ah NG LiFePO4
Lithium SuperPack NG 12.8V-100Ah LiFePO4
KEEP NEGATIVE BATTERY
CABLES ALL AS SHORT AS SAME LENGTH !
POSSIBLE AND ALL AT THE
Negative Busbar
Drawing BJE-332B
IMPORTANT INFORMATION !
When operating in inverter mode, the Neutral output of a inverter/charger must be connected to ground to guarantee proper functioning of a GFCI or RCD device.
In case of a split phase supply the Neutral also must be grounded.
The primary Case ground connection from a inverter charger like the MultiPlus, must be connected to the Central Negative busbar of the DC system. Size of this cable should be one size under total connected negative.
IMPORTANT INFORMATION !
Recommended AC Out-1 cable/breaker size MultiPlus
With Power assist the MultiPlus can add 3KW to the output load when needed. Together with the adjustable 50A input this all adds up to the max sum of input and output current of 50+13=63A. An Earth leakage device with breaker or a combination MCB/RCD must be installed on the output. Cable size must be adjusted accordingly.
IMPORTANT INFORMATION
Recommended AC Out-2 cable/breaker size
AC Out-2 only is available when pow
present on AC IN. During battery ope
it will be disconnected.
AC Out-2 supports up to 16A.
An Earth leakage device with breake
combination MCB/RCD must be insta
on the output. Cable size must be adj
accordingly.

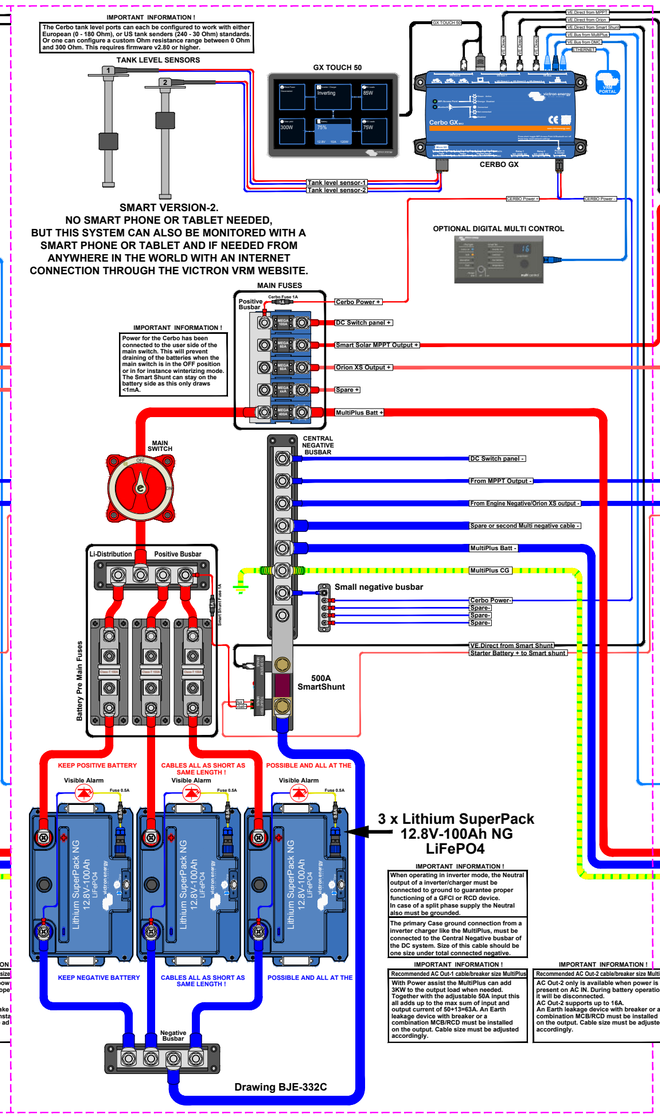
IMPORTANT INFORMATION !
The Cerbo tank level ports can each be configured to work with either European (0 - 180 Ohm), or US tank senders (240 - 30 Ohm) standards. Or one can configure a custom Ohm resistance range between 0 Ohm and 300 Ohm. This requires firmware v2.80 or higher.
TANK LEVEL SENSORS
GX TOUCH 50
CERBO GX
Tank level sensor-1
Tank level sensor-2
SMART VERSION-2.
NO SMART PHONE OR TABLET NEEDED,
BUT THIS SYSTEM CAN ALSO BE MONITORED WITH A SMART PHONE OR TABLET AND IF NEEDED FROM ANYWHERE IN THE WORLD WITH AN INTERNET CONNECTION THROUGH THE VICTRON VRM WEBSITE.
OPTIONAL DIGITAL MULTI CONTROL
MAIN FUSES
Cerbo Power +
DC Switch panel +
Smart Solar MPPT Output +
Orion XS Output +
Spare +
MultiPlus Batt +
MAIN SWITCH
CENTRAL NEGATIVE BUSBAR
DC Switch panel -
From MPPT Output -
From Engine Negative/Orion XS output -
Spare or second Multi negative cable -
MultiPlus Batt -
MultiPlus CG
Small negative busbar
Cerbo Power-
Spare-
Spare-
Spare-
VE.Direct from Smart Shunt
Starter Battery + to Smart shunt
500A SmartShunt
Li-Distribution
Positive Busbar
Battery Pre Main Fuses
KEEP POSITIVE BATTERY
CABLES ALL AS SHORT AS SAME LENGTH !
POSSIBLE AND ALL AT THE
Visible Alarm
Fuse 0.5A
3 x Lithium SuperPack 12.8V-100Ah NG LiFePO4
Lithium SuperPack NG 12.8V-100Ah LiFePO4
KEEP NEGATIVE BATTERY
CABLES ALL AS SHORT AS SAME LENGTH !
POSSIBLE AND ALL AT THE
Negative Busbar
Drawing BJE-332C
IMPORTANT INFORMATION !
When operating in inverter mode, the Neutral output of a inverter/charger must be connected to ground to guarantee proper functioning of a GFCI or RCD device.
In case of a split phase supply the Neutral also must be grounded.
The primary Case ground connection from a inverter charger like the MultiPlus, must be connected to the Central Negative busbar of the DC system. Size of this cable should be one size under total connected negative.
IMPORTANT INFORMATION !
Recommended AC Out-1 cable/breaker size MultiPlus
With Power assist the MultiPlus can add 3KW to the output load when needed. Together with the adjustable 50A input this all adds up to the max sum of input and output current of 50+13=63A. An Earth leakage device with breaker or a combination MCB/RCD must be installed on the output. Cable size must be adjusted accordingly.
IMPORTANT INFORMATION !
Recommended AC Out-2 cable/breaker size MultiPlus
AC Out-2 only is available when power is present on AC IN. During battery operation it will be disconnected.
AC Out-2 supports up to 16A.
An Earth leakage device with breaker or a combination MCB/RCD must be installed on the output. Cable size must be adjusted accordingly.

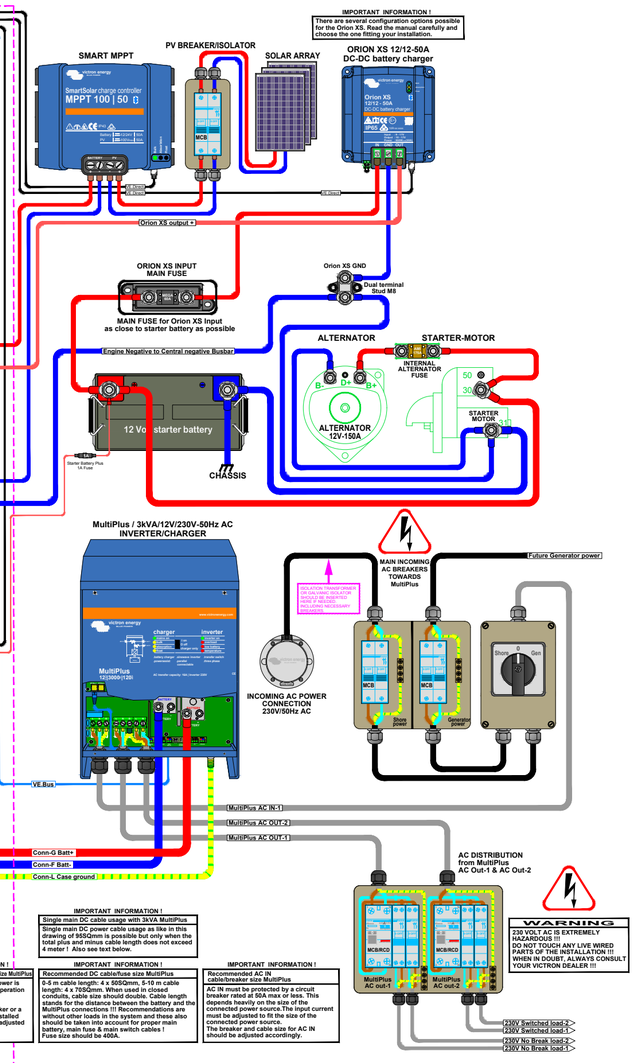
IMPORTANT INFORMATION !
There are several configuration options possible for the Orion XS. Read the manual carefully and choose the one fitting your installation.
SMART MPPT
PV BREAKER/ISOLATOR
SOLAR ARRAY
ORION XS 12/12-50A DC-DC battery charger
Orion XS output +
ORION XS INPUT MAIN FUSE
MAIN FUSE for Orion XS Input as close to starter battery as possible
Orion XS GND
Dual terminal Stud M8
Engine Negative to Central negative Busbar
ALTERNATOR
STARTER-MOTOR
INTERNAL ALTERNATOR FUSE
12 Volt starter battery
ALTERNATOR 12V-150A
CHASSIS
Starter Battery Plus 1A Fuse
MultiPlus / 3kVA/12V/230V-50Hz AC INVERTER/CHARGER
MAIN INCOMING AC BREAKERS TOWARDS MultiPlus
Future Generator power
INCOMING AC POWER CONNECTION 230V/50Hz AC
MCB
Shore power
Generator power
VE.Bus
MultiPlus AC IN-1
MultiPlus AC OUT-2
MultiPlus AC OUT-1
Conn-G Batt+
Conn-F Batt-
Conn-L Case ground
AC DISTRIBUTION from MultiPlus AC Out-1 & AC Out-2
MultiPlus AC out-1
MultiPlus AC out-2
WARNING
230 VOLT AC IS EXTREMELY HAZARDOUS !!!
DO NOT TOUCH ANY LIVE WIRED PARTS OF THE INSTALLATION !!!
WHEN IN DOUBT, ALWAYS CONSULT YOUR VICTRON DEALER !!!
230V Switched load-2>
230V Switched load-1>
230V No Break load-2>
230V No Break load-1>
IMPORTANT INFORMATION !
Single main DC cable usage with 3kVA MultiPlus
Single main DC power cable usage as like in this drawing of 505Qmm is possible but only when the total plus and minus cable length does not exceed 4 meter ! Also see text below.
IMPORTANT INFORMATION !
Recommended DC cable/fuse size MultiPlus
0-5 m cable length: 4 x 505Qmm, 5-10 m cable length: 4 x 705Qmm. When used in closed conduits, cable size should double. Cable length stands for the distance between the battery and the MultiPlus connections !!! Recommendations are based on a voltage drop in the system and these also should be taken into account for proper main battery, main fuse & main switch cables ! Fuse size should be 400A.
IMPORTANT INFORMATION !
Recommended AC IN cable/breaker size MultiPlus
AC IN must be protected by a circuit breaker rated at 50A max or less. This depends heavily on the size of the connected power source.The input current should not exceed 50A. Adjust the size of the connected power source.
The breaker and cable size for AC IN should be adjusted accordingly.